LIFTING LUG SIZING AS PER ASME BTH-1-2008

INPUT DATA PGM RUN *V1.0*

* Item Name	E-1004	* Description	PES21

DESIGN CONDITION

1) Material	SS400		2) Yield strength, Fy	2109	kgf/cm^2
3) Min. Tensile Stress, Fu	3800	kgf/cm^2	4) Design factor, Nd	3	
5) Lifting load "Y" direction(See Note 1)	250	kgf	6) Impact load factor	1.8	

LUG DIMENSION

1) Hole Diameter, Dh	25	mm	2) Width of Lug, w	70	mm
3) Thickness of Lug, t	13	mm	4) Outer radius, R	35	mm
5) Weld leg length, Leg	10	mm			

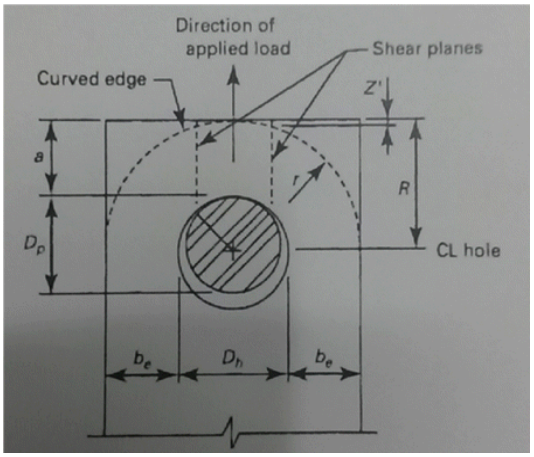

Note 1) Lifting load shall be applied to one lug only regardless of Lug Q'ty

RESULT OF CALCULATION

1) Applied load, W in "Y" direction	=250*1.8	450.0	Kgf

TENSILE STRESS

1) Ft=Fy/Nd for Allowable tensile stress (eq 3-1)	=2109/3	703.0	Kgf/cm^2
2) A=t*(w-Dh), Area of tensile stress	=(13*(70-25))/100	5.85	cm^2
3) St=W/A for tensile stress	=450/5.85	76.9	Kgf/cm^2
CHECK St, St < Ft		O.K	

SHEAR STRENGTH THROUGH PIN HOLE

1) Av=2*(R-(Dh/2) * Cos (Radians (45))))* t as per eq 3-50	=(2*(35-(25/2)*(cos(45*3.14159/180)))*13/	6.80	cm^2
2) Pv=0.7*Fu/			Kgf

(1.2*Nd)*Av	=0.7*3800/(1.2*3.0)*6.80	5,025.8	
CHECK, Pv =W < Pv		O.K	

SHEAR STRESS IN WELD

1) Exx = Fu for Tensile strength of weld filler metal		3,800.0	Kgf/cm^2
2) Fv = 0.6*Exx / (1.2*Nd) as per eq 3-53	=0.6*3800/(1.2*3)	633.3	Kgf/cm^2
3) Aw = (2*w+2*t) * (0.707*Leg) for Area of weld	=((2*70)+(2*13)*(0.707*10))/100	3.24	cm^2
4) Fw=Fv*Aw for Allowable weld load	=633.3*3.24	2,050.9	Kgf
CHECK, Fw = W < Fw		O.K	

MININUM WELD THROAT

1) Weld throat, wt	6.350	mm
CHECK wt = Leg*0.705 >=throat 3-3	O.K	

UNIT OPTION

MENU PAGE-->

Copyright © 2001 PES21 All rights reserved.
Please contact E-mail ***pes21@pes21.com***